WERTHSYSTEMS

SMART-MED MLI-6015

Medical 2.5 Gigabit Network Isolator With 6kV Isolation And Over-Tension Auto-Release

- UL / IEC 60601–1:2012 certified for world wide use
- Enhanced reinforced isolation - 6000 VAC for 1 minute
- Flexible in use - optional built in installation frames available
- Tensile force limiter with auto-release - reduces the risk of tripping over cables
- Durable - no ageing parts, 5 years warranty and long-term availability

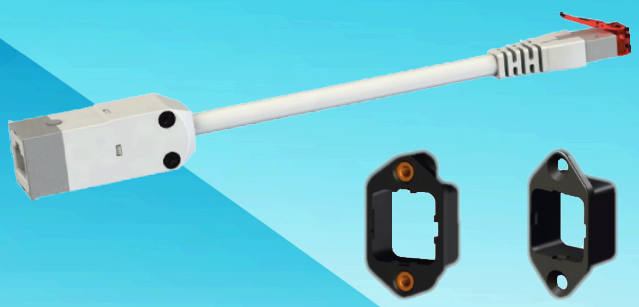

MADE IN GERMANY

UL Filenumber: E496012

6000V Isolation | 60601-1-2 4th. Edition | 24/7 Use | 5 Years Warranty | TRUESPEED Performance

Isolation & Safety Standard

The MLI-6015 is a state of the art Network Isolator which can be used on, or inside of mobile solutions. It is manufactured in Germany under ISO 13485 conditions and every single unit is tested on performance and isolation levels, up to 6000 V AC. This guarantees a ZERO DEFECT RATE.

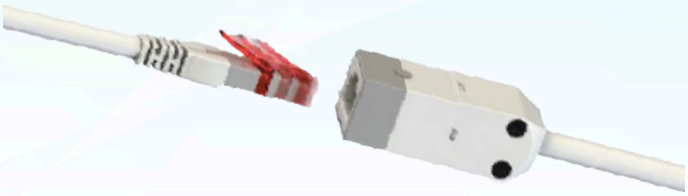

The Werth Systems MLI-6015 Network Isolator can be used for medical electrical systems in order to reduce leakage current and isolate applied parts from IT devices. It also protects your devices against equalizing currents, voltages surges, mains hum, ground loops and noise conditions. The MLI-6015 is totally transparent to the network and there is no need for additional drivers, or any additional power supply. Due to very low signal losses and very low capacitance, the isolator supports cable lengths up to 99 m without reducing network performance. This permits the installation of a large number of Network Isolators within a large local area network without degradation of network performance.

WERTHSYSTEMS

Technical Information

Description	MLI-6015 | MLI-6015i
Part Number	2000751 | 2000792
Isolation Type	Reinforced Isolation pulse transformer
reinforced Isolation UL/IEC60601-1	6 kV AC for 1 minute (50/60Hz). 8.5 kV DC for 1 minute
Leakage Current	Less than 1 Microampere
Electrostatic Protection	+/−15 kV (air)
Working Voltage	Max. 400 V AC/450 V DC
Insulation Type	2 MOOP / 2 MOPP
Tensile Force Limiter With Auto-Release	Yes, auto-release at 70 N (10 seconds)
Supported Transfer Rate	10 / 100 / 1000 / 2500 Mbit/s
Supported Cable Length	15 cm to 99 m
Return Loss	17 dB typical (100 MHz)
Insertion Loss	0.4 dB typical (100 MHz)
Cross Talk	-39 dB min.
Input Conector	RJ45 Plug
Output Connector	RJ45 Jack
Communication Standard	IEEE802.3 Cl.14, Cl.25, and Cl.40
Isolated Lines	All lines isolated
Ground Isolation	Yes
Plug & Play	Yes, auto-configuration, driverless
Power Supply	Not needed - passive transfomer
Color	White / Grey
Dimensions	47.5 x 17.4 x 17.0 mm (WxHxD), 150 mm network cable
Weight	24 g
Housing	Ruggedized ABS UL94-V0
Mounting	None - Only MLI-6015i :optional Snapfit installation frames available
IP Classification	IP40
Temperature Range	-25 °C to 60 °C
Production Control	ISO 9001 and ISO 13485
Country of Production	Germany
Warranty	5 Years
MTTF	More than 4000 years at 25 ° to 40 °C in 24/7 use
Safety Level	Single unit performance test and 6000 V isolation test
Norms / Standard	CE, RoHS, UL/IEC60601-1:2012, IEC60601-1-2:2014 CAN/CSA-C22.2 No. 60601-1:14, ANSI/AAMIES 60601-1/A1:2012
Mode of Operation	Continuous
Scope of Delivery	Blister pack with user manual

Options And Electrical Schematic Of The MLI-6015



Only for MLI-6015i

Snapfit installation frame INT

Material: polyamide, Part.No. 2000791



Only for MLI-6015i

Snapfit installation frame EXT

Material: polyamide, Part.No. 2000790

Electrical schematic MLI-6015

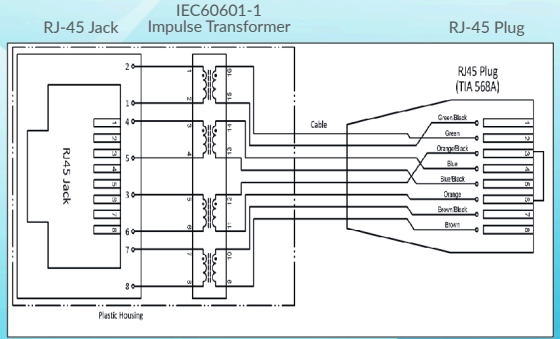

Isolation Diagram MLI-6015

Area	Number and type of Means of protection	Material group (from CTI)	Maximum operating voltage		Required creepage distance (mm)	Required clearance distance (mm)	Measured creepage distance (mm)	Measured clearance distance (mm)
			V AC	V_{peak}				
A	2 MOPP	IIIb	400	565	12.0	7.0	12.0	9.0

Werth Systems GmbH © 2024 | Errors and misprints reserved