WERTHSYSTEMS

SMART-MED MLI-6000

Medical 2.5 Gigabit Network Isolator With 6kV Isolation

- UL / IEC 60601–1:2012 certified for world wide use
- Enhanced reinforced isolation - 6000 VAC for 1 minute
- Secures your system - built-in surge and over voltage protection
- TRUESPEED Technology - for up to 100% Network perfomance without losses
- Durable - no ageing parts, 5 years warranty and long-term availability



MADE IN GERMANY

UL Filenumber: E496012

6000V Isolation | 60601-1-2 4th. Edition | 24/7 Use | 5 Years Warranty | TRUESPEED Performance

Isolation & Safety Standard

The MLI-6000 is a state of the art Network Isolator which can be mounted on DIN-Rails or on flat surfaces. It is manufactured in Germany under ISO 13485 conditions and every single unit is tested on performance and isolation levels, up to 6000 V AC. This guarantees a ZERO DEFECT RATE.

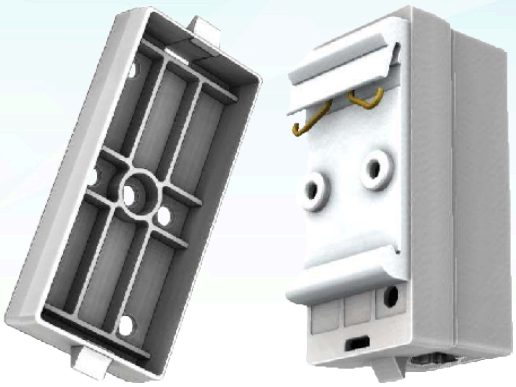

The Werth Systems MLI-6000 Network Isolator can be used for medical electrical systems in order to reduce leakage current and isolate applied parts from IT-devices. It protects your devices against voltages surges, lightning strikes, ground loops and noise conditions. The MLI-6000 is totally transparent to the network and there is no need for additional drivers, or any additional power supply. Due to very low signal losses and very low capacitance, the Isolator supports cable lengths up to 99 m without reducing network performance. This permits the installation of a large number of Network Isolators within a large local area network without degradation of network performance.

WERTHSYSTEMS

Technical Information

Description	MLI-6000
Part Number	2000728
Isolation Type	Reinforced Isolation pulse transformer
Reinforced Isolation UL/IEC 60601-1	6 kV AC for 1 minute (50/60Hz). 8.5k V DC for 1 minute
Leakage Current	Less than 1 Microampere
Electrostatic Protection	+/-15 kV (air)
Working Voltage	Max. 400 V AC / 450 V DC
Insulation Type	2 MOOP / 2 MOPP
Surge Protection	Yes, reinforced TAZ Diode (Transient Absorption Zener Diode)
Supported Transfer length	10 / 100 / 1000 / 2500 Mbit
Supported Cable Length	Up to 99 m
Return Loss	20 dB typical (100 MHz)
Insertion Loss	0.7 dB typical (100MHz)
Cross Talk	-40 dB min.
Input Conector	RJ45 jack
Output Connector	RJ45 jack
Communication Standard	IEEE802.3 Cl.14, Cl.25, and Cl.40 Standard
Isolated Lines	All lines isolated
Ground Isolation	Yes
Plug & Play	Yes, auto-configuration, driverless
Power Supply	Not needed - passive transfomer
Color	Light grey
Dimensions	65.2 x 23 x 29 mm (WxHxD)
Weight	30 g
Housing	Ruggedized ABS UL94-V0
Mounting	Optional screw - on mount or DIN Rail Mount
IP Classification	IP40
Temperature Range	-25 °C to 70 °C
Production Control	ISO 9001 and ISO 13485
Country of Production	Germany
Warranty	5 years
MTTF	More than 3000 years at 25 ° to 40 °C in 24/7 use
Safety Level	Single unit performance test and 6000 V isolation test
Conformity	CE, RoHS
Norms	IEC60601-1:2012, IEC60601-1-2:2014, CAN/CSA-C22.2 No.60601-1:14, ANSI/AAMI ES60601-1/A1:2012
Mode of Operation	Continuous
Scope of Delivery	Blister pack with user manual

Options And Electrical Schematic Of The SMART-MED MLI-6000



25cm CAT6 S-FTP Patchcable RoHS

Gold plated, latch protection, Part. No. 2000718



DIN Rail Mount

Part. No. 2000729



Mounting Plate

Part. No. 2000730

Electrical schematic MLI-6000

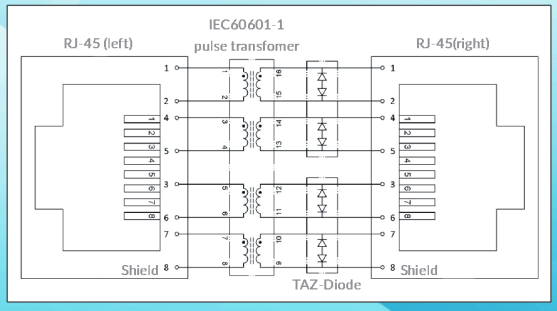

Isolation Diagram MLI-6000

Area	Number and type of Means of protection	Material group (from CTI)	Maximum operating voltage		Required creepage distance (mm)	Required clearance distance (mm)	Measured creepage distance (mm)	Measured clearance distance (mm)
			V AC	V_{peak}				
A	2 MOPP	IIIb	400	565	12.0	7.0	12.4	12.4

Werth Systems GmbH © 2024 | Errors and misprints reserved